Application Note

BU Suspension Assembly Demo VBU-32500-000

The BU Series Accelerometer is widely used as a contact microphone for voice pickup via bone conduction. 10kHz bandwidth and compact size make it an attractive option for communications applications.

For voice pickup, the BU needs both contact pressure and latitude to vibrate when contacting the head. Good contact is possible at the top of the head, on the forehead, in front of the ear or behind the ear. The design of a suspension mounting that provides performance and comfort is key to a headset or helmet design that incorporates BU.

A suspension assembly demonstrator is offered to facilitate listening evaluation and provide a simple example. Material for the demonstrator is easily obtained and inexpensive. BU-23173-000 (highest sensitivity BU) is sandwiched between layers of latex sheet attached to a rigid washer stack.

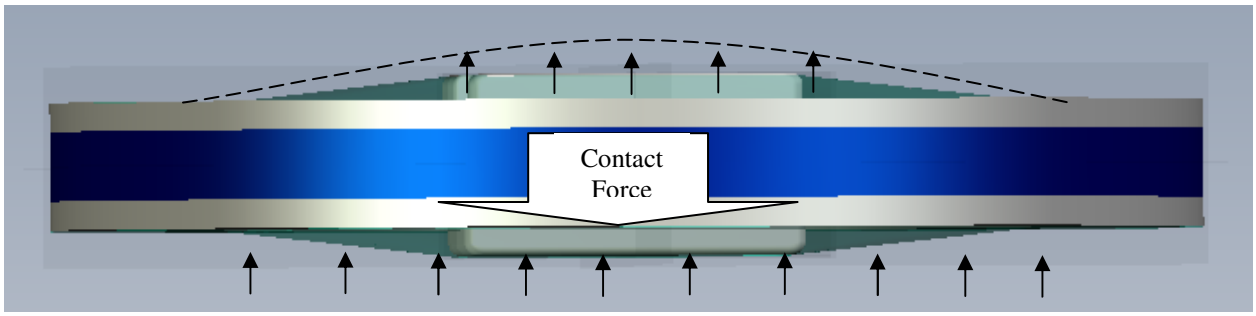

The BU is slightly thicker than the washer stack, so the contact surface deflects slightly when pushed against the head. Further force on the washer stack is distributed across the entire assembly rather than on the BU element – helping to control the contact pressure. Flexible litz wire is used to prevent vibration transmission through the leads. The connection is adapted for 2-wire hook-up to facilitate recording of audio files.

AMERICAS:
Knowles Acoustics
1151 Maplewood Drive
Itasca, IL 60143
U.S.A.
Tel: 630-250-5930
Fax: 630-250-5932

EUROPE:
Knowles Electronics Denmark
Havnevej 7 4000 Roskilde
Denmark
Tel: 45 70 25 35 70
Fax: 45 70 25 35 71

JAPAN:
Knowles Electronics Japan, KK
2-2-16, Sangenjaya,
Setagaya-ku, Tokyo
154-0024 JAPAN
Tel. +81-3-5779-8503
Fax: +81-3-5779-8523

ASIA:
Knowles Acoustics
5F, No. 129, Lane 235, Bauchiau Rd.
Shindian City, Taipei 231, Taiwan
Republic of China
Tel: 886-2-8919-1799
Fax: 886-2-8919-1798

SPECIALTY TRANSDUCERS CUSTOM ASSEMBLIES MICROPHONES ACOUSTIC TECHNOLOGIES

The assembly is provided with short lead wires. For a listening demonstration it is recommended to attach the demo assembly to a 3.5mm audio connector cable.

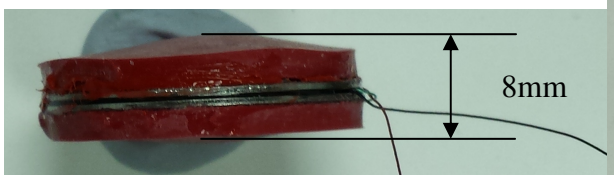

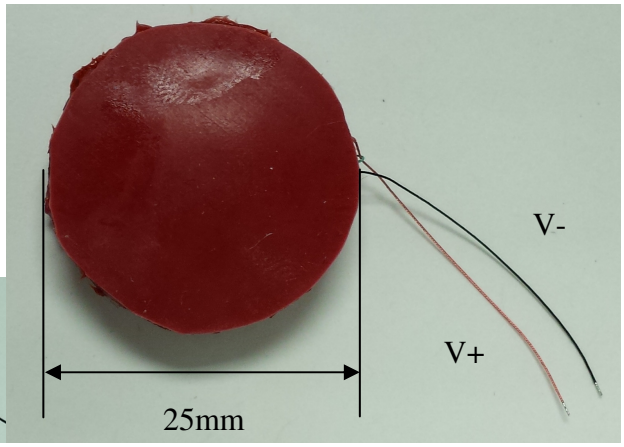

Hook-up Options:

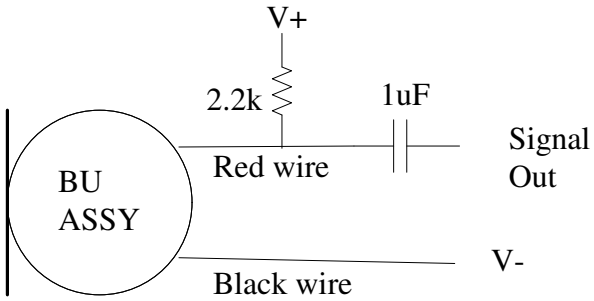

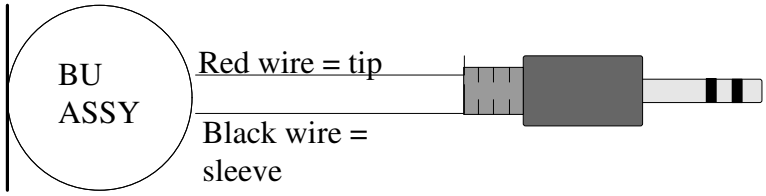

AMERICAS:
Knowles Acoustics
1151 Maplewood Drive
Itasca, IL 60143
U.S.A.
Tel: 630-250-5930
Fax: 630-250-5932

EUROPE:
Knowles Electronics Denmark
Havnevej 7 4000 Roskilde
Denmark
Tel: 45 70 25 35 70
Fax: 45 70 25 35 71

JAPAN:
Knowles Electronics Japan, KK
2-2-16, Sangenjaya,
Setagaya-ku, Tokyo
154-0024 JAPAN
Tel. +81-3-5779-8503
Fax: +81-3-5779-8523

ASIA:
Knowles Acoustics
5F, No. 129, Lane 235, Bauchiau Rd.
Shindian City, Taipei 231, Taiwan
Republic of China
Tel: 886-2-8919-1799
Fax: 886-2-8919-1798

SPECIALTY TRANSDUCERS CUSTOM ASSEMBLIES MICROPHONES ACOUSTIC TECHNOLOGIES

Input Suggestion

When wired to 3.5mm audio plug, BU demo VBU-32500-000 may be connected to a USB sound card and recorded to PC for easy listening evaluation upon playback. The iMic from Griffin Technologies includes a stereo microphone-level input that provides power and pre-amplification for the BU demo. If a conventional microphone is wired to the same stereo plug, a stereo recording can be made and used to compare the performance of BU bone conduction to the air conducted signal. Audacity offers a free digital audio editor that is also useful for amplification and other processing of the recorded signal.

Model Key

Model	Package	Mass loaded	Specified hook-up
BU-21771-000	standard	No	2-wire
BU-23173-000*	standard	Yes	2-wire
BU-23842-000	Thin	Yes	2-wire
BU-23842-141	Thin	Yes	3-wire
BU-27135-000	thin	no	2-wire

*Used in demo

AMERICAS:
Knowles Acoustics
1151 Maplewood Drive
Itasca, IL 60143
U.S.A.
Tel: 630-250-5930
Fax: 630-250-5932

EUROPE:
Knowles Electronics Denmark
Havnevej 7 4000 Roskilde
Denmark
Tel: 45 70 25 35 70
Fax: 45 70 25 35 71

JAPAN:
Knowles Electronics Japan, KK
2-2-16, Sangenjaya,
Setagaya-ku, Tokyo
154-0024 JAPAN
Tel. +81-3-5779-8503
Fax: +81-3-5779-8523

ASIA:
Knowles Acoustics
5F, No. 129, Lane 235, Bauchiau Rd.
Shindian City, Taipei 231, Taiwan
Republic of China
Tel: 886-2-8919-1799
Fax: 886-2-8919-1798

The BU Series piezo-ceramic accelerometer has output from 20 Hz to above 10 kHz, and is used primarily as a contact microphone for use in high noise environments. It may also be used as an accelerometer with lightweight structures.

BU Construction

The signal is generated by inertial motion between the case and the cantilevered piezo-ceramic beam. An FET amplifier converts the signal impedance to about 5 kohm for specified 2-wire hook-up. Some models have mass added to the end of the beam to boost sensitivity.

The case size is either standard (pictured) or thin (half of standard thickness), and is sealed.

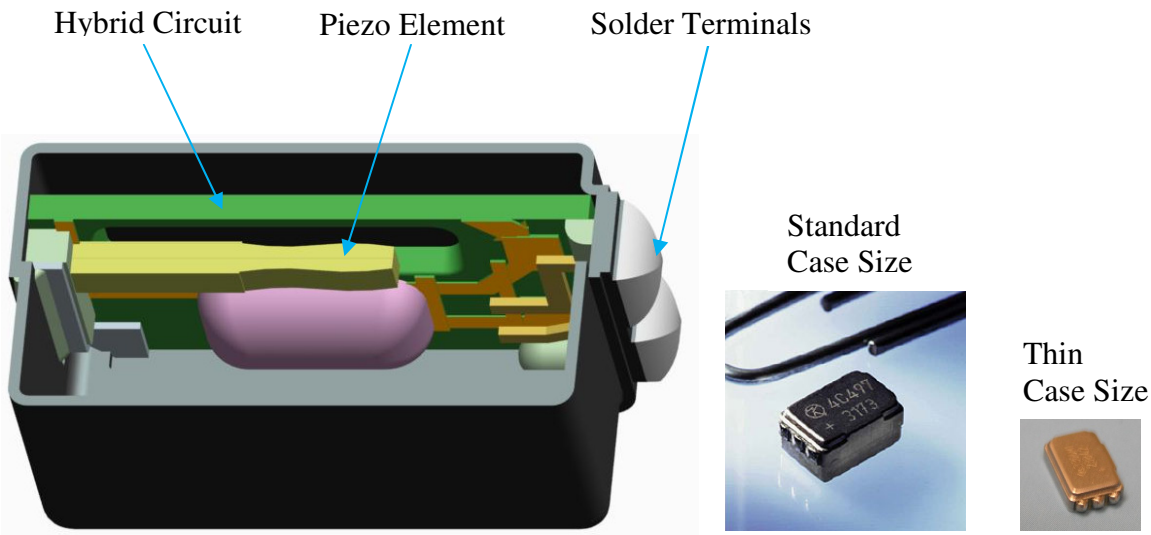

AMERICAS:
Knowles Acoustics
1151 Maplewood Drive
Itasca, IL 60143
U.S.A.
Tel: 630-250-5930
Fax: 630-250-5932

EUROPE:
Knowles Electronics Denmark
Havnevej 7 4000 Roskilde
Denmark
Tel: 45 70 25 35 70
Fax: 45 70 25 35 71

JAPAN:
Knowles Electronics Japan, KK
2-2-16, Sangenjaya,
Setagaya-ku, Tokyo
154-0024 JAPAN
Tel. +81-3-5779-8503
Fax: +81-3-5779-8523

ASIA:
Knowles Acoustics
5F, No. 129, Lane 235, Bauchiau Rd.
Shindian City, Taipei 231, Taiwan
Republic of China
Tel: 886-2-8919-1799
Fax: 886-2-8919-1798

SPECIALTY TRANSDUCERS CUSTOM ASSEMBLIES MICROPHONES ACOUSTIC TECHNOLOGIES